

Snubbing_2014.indd 1 6/20/14 8:45 PM

SNUBBING

INTRODUCTION

Snubbing is defined as lowering pipe into the wellbore when the well is shut in against pressure and the weight of the pipe is not sufficient to overcome the upward force of the well pressure. The common expression used to describe the process is to "snub in" or conversely, "snub out." The snubbing operation is considered "pipe light," meaning there is insufficient pipe weight to overcome the well pressure[1]. When the weight of the pipe is greater than the upward forces from the well, the condition is said to be "pipe heavy." Moving pipe into or out of a well in pipe heavy conditions is stripping. It can be seen that during many operations, there may be one or more transitions between pipe light and pipe heavy conditions. Modern snubbing units, equipped with a hydraulic rotary, are capable of performing a variety of workover operations besides well control, including:

- Fishing
- Milling
- Drilling
- Sidetracking
- Removing plugs
- Deepening wells

1 *A Dictionary for the Petroleum Industry (2nd ed.)*

Snubbing_2014.indd 2 6/20/14 8:45 PM

SECTION 1: SNUBBING UNITS

CONVENTIONAL (MECHANICAL) SNUBBING UNITS

Although *conventional snubbing units* were first developed in the 1920s, they are rarely used today. They were designed for the express purpose of running pipe into a well against pressure when it was not possible to kill the well by conventional means. They are rigged up on drilling or workover rigs and use the rig drawworks for power. A system of sheaves, blocks and counter weights are rigged in such a way that as the traveling block is hoisted upward, the snubbing unit forces the pipe downward into the well. The basic equipment consists of a traveling head and slip bowl arrangement, a counterbalance weight, cables, accumulator reserve, snubbing BOPs and a power pack. Since the unit is mounted above the rig rotary table, conventional snubbing units cannot rotate the work string unless special modifications are made. Also, a conventional unit cannot use the rig slip assembly; therefore, it can only handle pipe light conditions.

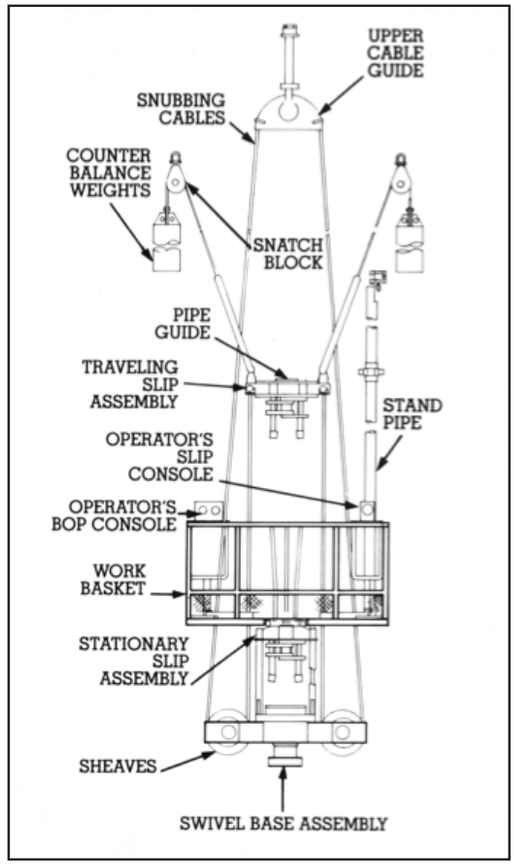

Figure B-1: Mechanical SnuBBing unit

Conventional units are not equipped with a guide tube system to support the work string or prevent it from buckling when snubbing against well pressure. Small bites, or sections of pipe, are snubbed in at the beginning of a job. As more pipe weight is injected into the well, longer sections per stroke can be snubbed. Once a conventional unit has run enough pipe into the well to overcome well pressure, the unit can be rigged down. Rig personnel can then continue to strip into the well.

Since conventional units are easily transported and rigged up on standard rig equipment they are generally less expensive than modern hydraulic snubbing units. Conventional unit crews are minimal because rig personnel assist the snubbing crew. However, in some cases this can cause complications since most rig crews are not experienced in snubbing operations. The driller must learn to re-think the mechanics of pipe direction because the conventional unit is rigged up so that as the traveling block moves upward, the pulley/sheave system pulls the pipe downward. This reversal of the normal operations can create problems. Today, conventional snubbing units have largely been replaced by hydraulic units.

HYDRAULIC WORKOVER UNITS (HWO)

Hydraulic jacking units, called hydraulic workovers (HWO), were first developed in the 1950s and have proved to be far more versatile than the earlier mechanical units. They have long been used in well control situations. Nowadays a great deal of routine remedial work is done in an underbalanced condition in order to avoid affecting production

Snubbing_2014.indd 3 6/20/14 8:45 PM

or damaging the producing formation. Modern HWO units, equipped with sophisticated hydraulic systems, can perform a variety of remedial well services that cannot be done as safely or as efficiently by conventional snubbing units. Many companies that offer snubbing services also provide other associated live-well services; for example, emergency firefighting, freezing[2], and hot tapping[3].

HWO units are smaller and lighter than conventional workover rigs. They are highly mobile and therefore have a distinct advantage over wireline or coiled tubing units on jobs that require pipe handling capability. There are two main types of HWOs: *stand-alone units* and *rig-assist units*. Both types use hydraulic jacks to move pipe within live wells and share some of the same basic equipment. Components are modular for ease of transport and rig-up. Some units are self contained; others are mounted on skids.

HWO units are usually sized according to their lift/snub capacity; for example, 460,000 lbs (460K), 340K or 200K. Most snubbing units can snub half of their lift rating, so a 460K unit is capable of lifting 460,000 lbs and snubbing 230,000 lbs. As an example, assume a well with 10,000 psi surface pressure and that it was required to snub in a string of 2-3/8 inch tubing. Assume also the snubbing contractor calculates the snub force, adds in the respective friction calculations and projects that the snub force to overcome would be approximately 51,000 lbs. This would put a 120K snubbing unit too close to the maximum capacity of 60,000 lbs snub loading. In this case the safest course would be to use a 150K or 235K unit.

STAND-ALONE UNITS

Stand-alone units, as the name implies, are free standing snubbing units which do not require a conventional rig on site. They are fully equipped with automated pipe-handling systems and hydraulic driven rotaries. The units are easily transported, rig up quickly and occupy a small footprint on the wellsite location. Stand-alone units are the most predominant type of snubbing unit used today. They usually have an 8-to14-foot stroke, and have an excellent tubing guide system. These units can handle surface pressures up to 20,000 psi. They may be rigged up on top of the wellhead or a BOP stack. The relatively small footprint of an HWO unit is a distinct advantage when rigging up on small (satellite) platforms. When rigging up offshore, stand-alone units can usually be rigged up in 36 to 48 hours. Since the work area is above the BOPs and wellhead, personnel often work at considerable heights.

RIG ASSIST UNITS

Rig assist HWO units work in conjunction with a service rig to lift the unit into place. They have much of the same hydraulic equipment as stand-alone units. Rig assist units were designed to retain the simplicity of conventional units while at the same time retaining the benefits of hydraulic units. Today there are several specific types of small, modular snubbing units manufactured and marketed as "rig assist" units. Their low height is achieved by mounting a short BOP stack (usually an annular stripper/preventer above two stripper rams) inside a steel frame between

2 *A process that involves freezing a plug in place with dry ice (carbon dioxide); used when other pressure control means are impractical or unsafe.*

3 *A process that involves using specially designed equipment to drill a port or vent in order to relieve pressure that is trapped behind other equipment.*

Snubbing_2014.indd 4 6/20/14 8:45 PM

the hydraulic jack legs. One service company advertises a unit rated for 170K service. Generally the BOP package is a 5,000 psi stack with a bore of 7-1/16 inches. There is only one flange connection to the existing BOP stack; therefore, rig up/rig down time is kept to a minimum. The unit has a 10-foot stroke, depending on the specific job requirements. In some areas, rig assist units have become the most frequently used snubbing units when dealing with low to medium well pressures.

Advantages of rig assist units include:

- A one-piece lift, directly rigging onto the service rig BOPs.
- A truck mounted for high mobility.
- A unique, low-height design places the BOPs inside the hydraulic jack, which makes a rig assist unit highly compatible with all sizes of service and drilling rigs.
- An annular control system that allows stripping collared tubing, thereby eliminating the need for pipe rams to strip collars at moderate to low pressure.
- Rig assist units have the ability to snub or strip pipe, ram-to-annular or ram-to-ram as the situation requires.

HWO UNIT COMPONENTS

Both rig assist units and stand alone units share many of the same components and the same principles of operation. The primary components of a stand-alone unit are discussed below.

GIN POLE

Pipe handling is performed by the snubbing unit's *gin pole* and *pipe winches*. The gin pole is often telescoped out in excess of 40 feet above the snubbing unit itself. With the use of dual tubing winches, multiple joints of pipe can be handled simultaneously, thus speeding up the operation.

HYDRAULIC JACK ASSEMBLY

The *hydraulic jack assembly* is a series of two or more hydraulic cylinders that travel in an upward or downward direction to move pipe out of, or into, the well. Some custom-designed rig assist units have been rigged to use only one large cylinder. For more lifting or snubbing power, more hydraulic cylinders are used. When more cylinders are required, the speed of the unit slows down.



Figure B-2: hydraulic jackS

Conversely, when fewer cylinders are needed, the speed increases. The hydraulic pressure can be precisely regulated, which allows complete control when running or pulling pipe or tools within the well. Excessive pressure can cause damage or even failure of the work string. Fluctuating pressure at the jacking assembly could also cause

Snubbing_2014.indd 5 6/20/14 8:45 PM

certain downhole tools to inadvertently set or release. Another means of increasing unit speed is with the use of a regenerative circuit. A *regenerative circuit* provides a path to circulate hydraulic fluid from the snub side of the piston to the lift side. A regenerative circuit is used only when pulling pipe from the well. When used, the regenerative circuit decreases the lifting capacity by half, but the speed is doubled.

GUIDE TUBE

The function of a *guide tube* is to prevent pipe buckling. It is placed in the bore of the jack and is attached below the traveling slips. The guide tube travels up and down with the traveling assembly to prevent lateral movement of the pipe. There are different sizes of guide tubes that are available with the unit. The proper tubing guide is a matter of using the smallest tube that will allow the tool joints of the work string to pass through it. Tubing guides that are larger than necessary could allow the pipe to kink or buckle. Guide tubes are used at all times when snubbing operations are taking place.



Figure B-3: a guide tuBe

WINDOW

The window is situated at the base of the jack, below the stationary slips and above the stripper. Its purpose is to provide an access for changing out or installing tools with an OD too large to pass through the guide tube. Snatch lines, chain tongs, power tongs and backups are commonly used to make up and break out equipment in the window area. Since this area is usually small, proper pre-job planning is essential.



Figure B-4: WindoW

WINDOW GUIDE

The *window guide* has an identical function to the guide tube. It prevents major axis buckling of the string in the window.

The hydraulic slip assembly is a main component of any snubbing unit. Stationary and traveling slips are operated in sequence to grip the pipe as it is snubbed into the well. Typically, a minimum of four slip bowls are used in snubbing operations. Two slip bowls are designated for “pipe light” operations when the wellbore forces are greater than the tubular weight in the wellbore. The other two slip bowls are used for “pipe heavy” operations when either enough pipe has been snubbed into the wellbore or when the pipe weight, plus the weight of the fluid inside the pipe, is greater than the forces acting against the pipe from the wellbore.

Snubbing_2014.indd 6 6/20/14 8:45 PM

TRAVELING SLIPS

Traveling slips, or *snubbers,* are located on, and move with, the traveling assembly. These slips grip the pipe and transmit force to lift the pipe from the well, or to force it down into the well. Two or more sets may be used for lifting and for snubbing. By using two sets of traveling slips, a time advantage is gained by not having to invert a single set when the balance point is reached. However, if both are simultaneously set, it may be difficult to disengage them from the pipe. Bidirectional slips that hold in either direction have also been developed but are not frequently used.



Figure B-5: cavin type g SlipS

STATIONARY SLIPS

The *stationary slips* are attached to the base of the jack. They hold the pipe when the traveling slips are not engaged. The typical unit will have two opposed sets of stationary slips, one for snubbing (for preventing pipe travel upwards when pipe light), and one in the pipe heavy position (to prevent pipe from traveling downwards due to gravity). If wellbore pressures are high and require high snubbing force, the second set may also be in the pipe light position and used as a backup to the primary set of stationary slips.

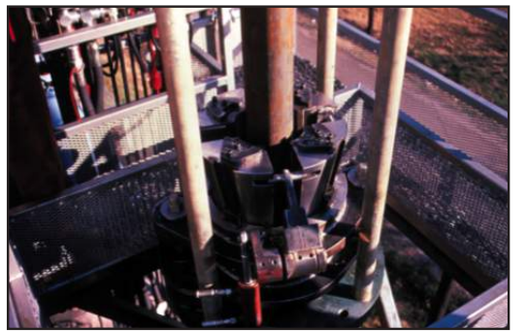

Figure B-6: Stationary SlipS

ROTARY TABLE

If available, the *rotary table* is attached to the traveling assembly. It gives the snubbing unit the ability to perform drilling and milling operations. Rotary speed (rpm) is hydraulically powered and regulated hydraulic fluid volume (as opposed to hydraulic pressure). The hydraulic rotary makes it possible for the unit to be used for fishing, milling, side-tracking or underbalanced drilling (UBD).

WORKBASKET

Most snubbing crews consist of 6 men working in 12-hour shifts. Three men work on the ground principally handling pipe and monitoring the ground-placed equipment. Three workers, the service operator, his relief and a tong operator do the actual snubbing work in the *workbasket*. The workbasket is located on top of the hydraulic jacks. The basket contains the necessary hydraulic controls to operate all the features of the snubbing unit as well as a large bank of BOP and hydraulic valve controls. Other tools, such as a full opening safety valve (FOSV), are also kept in the basket.



Figure B-7: a WorkBaSket

Snubbing_2014.indd 7 6/20/14 8:45 PM

POWER TONGS

Hydraulically powered tongs are used to make up or break out connections on larger diameter pipe. They are rigged up in the workbasket.



Figure B-8: poWer tongS

CONTROL PANEL

Controls for the jack, stationary and traveling slips, counterbalance and BOP stack are located in the workbasket. The controls are usually divided into two separate panels, one for the service operator, and one for his relief. The operator controls the operation of the slips and the direction of the jack. This panel is equipped with a weight indicator that shows snub or lift load on the jack. On some units, hydraulic pressure may be regulated from these panels. The relief operator usually controls movement of the counterbalance winch, which transports joints of pipe to or from the basket. The third worker operates the hydraulic tongs when making or breaking connections. The relief also controls stripper rams, equalizing loop, pump in line, vent line and safety rams. (Shear and blind/shear rams may also be controlled from the basket. They use higher operating pressure than pipe, safety and stripper rams, and therefore may require a separate regulated hydraulic circuit.) BOP functions can also be controlled from a remote station which is usually part of the accumulator package. Certain BOP functions can only be controlled from the remote station. Other workbasket controls can be rigged up to function from a ground control station in extremely hazardous or high pressure environments.

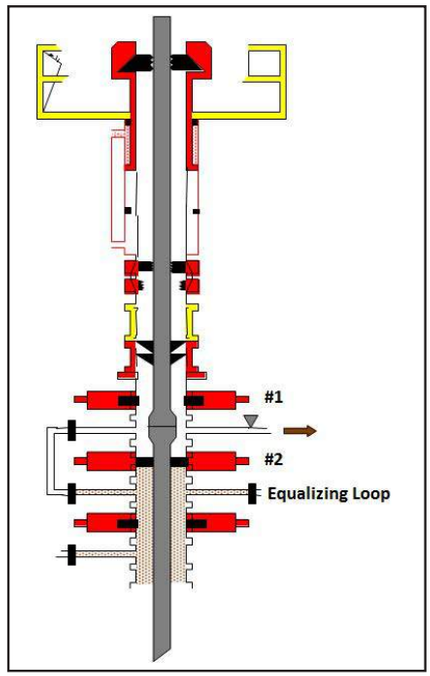

Figure B-9: Stripper raMS With equalizing loop

POWER PACK AND ACCESSORIES

The *power pack* consists of hydraulic pumps and a power source, normally a diesel engine. It supplies hydraulic pressure for jack operation, BOPs, rotary table, counterbalance, and power tongs. The power pack is equipped with gauges that indicate hydraulic pressure on the various circuits. Hydraulic pressure output is precisely controlled by a series of pressure-regulating and dump valves, which control hydraulic pressure to the various circuits. The main power pressure (to the jacks), BOP pressure, and the counterbalance pressures are all regulated. Pressure-rated hydraulic hoses are used to transport hydraulic fluid from the power pack to the various circuits. Once rigged, all hydraulic hoses should be tested in both the extended and retracted position of the unit in order to exert the appropriate maximum pressure on all lines and fittings in the main power (jack) circuit.



Figure B-10: a poWer pack

Snubbing_2014.indd 8 6/20/14 8:45 PM

MAIN POWER CIRCUIT

The *main power circuit* delivers hydraulic power to the jack. The maximum jack pressure is set when snubbing into a well. If the pressure exceeds the set value, excess pressure will dump or unload from this system. Care must be taken so that the set maximum pressure will not exceed the buckling or tensile limits of the pipe. A safety factor is calculated to de-rate these pipe limiting values.



Figure B-11: operator'S conSole

BOP CIRCUIT

Separate hydraulic pumps and air pumps are assigned to the BOP system in order to provide 100% redundancy. The operating pressure is the pressure applied to the rams (stripper and safety), stripper rubber and slips. Accumulator bottles provide an auxiliary pressure supply for the BOPs. Like drilling and workover rigs, the accumulator system must be sized to provide sufficient volume and pressure to function all the BOPs at least one and a half times with a minimum of 1,200 psi still remaining in the accumulators.



Figure B-12: Bop conSole

COUNTERBALANCE CIRCUIT

Counterbalance pressure is regulated for hoisting or lowering joints of pipe to and from the basket and is controlled at a panel in the basket. Counterbalance system pressure is regulated so that the applied pressure is no more than required to lift the joints to the basket. When pressure is regulated to the value that is just enough to lift the pipe, it will stall out if the joint hangs up or tops out without damaging the joint or other equipment.

CIRCULATING SYSTEM

The *circulating system* on snubbing units consists of essentially the same components as those found on conventional workover rigs. Pumps are normally high pressure, low volume pumps and are rated to handle the highest anticipated circulating or surface pressure for the job. Either a kelly hose or chicksan line is used to connect the pump to the circulating swivel. The swivel is made up on the tubing and serves as the connection point for the kelly hose (or chicksan). A full opening safety valve is made up in the connection.



Figure B-13: hoiSting or loWering pipe uSing the counterBalance SySteM

Snubbing_2014.indd 9 6/20/14 8:45 PM

PRIMARY BOP STACK COMPONENTS

Unlike most drilling rigs, the BOP stack used on a medium-to-high pressure snubbing job can vary depending on the specific job and is often carefully designed for a specific job by the snubbing contractor. Primary pressure control during snubbing operations is provided by an assembly of *stripping rams*. The stripping ram set consists of two sets of pipe rams, one on top of the other, with equalizing piping between them. They are opened one at a time to allow the collars (tool joints) of the connections between joints of pipe to pass through the rams. Below the stripping rams is another set of pipe rams, usually called *safety rams. Blind/shear rams,* flanged directly above the Xmas tree (or on the tubing flange) are rigged under the safety rams.

Using the stack described above, the snubbing process would begin with the lower (#2) stripping rams closed so as to seal off the wellbore pressure. The space between the rams can then be bled off allowing the upper rams (#1) to be opened. The tool joint can then be lowered through the opened upper rams. Once the tool joint is between the rams, the upper rams are closed and pressure is equalized on either side of the lower rams. The lower rams are then safely opened, and the collar is lowered through the rams. This process is repeated as successive joints of pipe are lowered into the well. When pulling out of the well, the procedure is reversed.

It should be noted that the brief stack description above is simplistic and should not be taken as any sort of standard for snubbing BOP arrangements or procedures. There are many acceptable variations to this illustration, and several more ram sets, dressed for specific purposes, may be included. Also, an annular preventer may be installed (often above the stripper rams). Annular BOPs are available in various sizes and pressure ratings and are ideal for lower pressure gas wells. When the annular element is closed, it forms a seal around the body of the pipe. The upset or larger diameter section of a pipe connection can be pulled or pushed through a closed annular element without damage and still maintain a gas-tight seal. Rig assist units usually have an annular stripper installed directly above the two stripper rams as part of the modular unit. Individual BOP stack components are briefly described below.

The basic ram preventer is versatile due to the different ram block inserts that may be used. Bore size, pressure rating, H_2S trim, number and type of rams are all variables that may be custom tailored for an individual job. Types of commonly used rams and components in snubbing are Stripper Rams, Equalizing Loops, Safety Rams, Blind Rams, Blind/Shear Rams, Variable Bore Rams and Spacer Spools.

Stripper Rams are usually the two top rams on the snubbing stack used to trip pipe under pressure. The packer insert elements used in stripper rams are specially designed for long life during snubbing/stripping operations.

The Equalizing Loop is a high pressure piping circuit running from below stripping ram #1 to below stripping ram #2. Since rams are wellbore energized to varying degrees, in order to open ram #2 with pressure below it, the pressure must be equalized on both sides of the rams. Manual and hydraulic valves are run off both lines from the BOP stack. These are usually low torque valves. An inline positive choke is used to reduce the hydraulic hammer effects when the lower valve is opened. Sometimes a pump-in line may be rigged to equalize pressures between the stripper rams. Using this line maintains fairly constant pressures, thus reducing hydraulic swabbing that can occur when equalizing the pressures.

Snubbing_2014.indd 10 6/20/14 8:45 PM

Since stripper ram #1 may or may not open with pressure beneath it, a bleed line or vent line below it is used to vent pressure after stripper ram #2 is closed. Caution should always be used when opening ram #1 even though the pressure should bleed off when the line is opened.

Safety Rams are normal pipe rams that are used either as backup rams or to close and seal pressure when changing out the stripper ram inserts. One or more safety rams may be used depending on operator preference, anticipated pressures and other factors.

Blind Rams have no cutout on the ram block. They are designed to close and seal on an open well. If closed inadvertently, they will not cut the pipe, nor will they mash or crimp tubing completely shut.

Blind/shear Rams are designed to cut the pipe and form a seal to contain well pressure. Special consideration is given when selecting blind/shear rams to ensure that they will cut the particular pipe in use. The closing pressure required to cut the pipe must also be considered. Hydraulic multipliers or boosters are often used to ensure that the necessary pressure is available.

Variable Bore Rams are available to close on more than one size pipe without having to change out the rams. They are especially useful with tapered strings or where space prevents running more rams.

Spacer spools provide necessary clearance between the stripper rams for tool joint or tool clearance. They are also used for general stack spacing as well as to connect the stack with existing well connections. Small ID spacer spools can be used between large bore BOP components to provide added rigidity to the tool string.

OUTLET SPOOLS

Outlet spools or circulating ports are used to access the well. An outlet spool should always have a BOP below it in case the outlet fails. Double valve arrangements, or blind flanges, are used off of each outlet. Outlet spools are usually used for primary circulation. Circulating through an outlet spool minimizes abrasion due to fluid friction inside the BOP body and circulating ports.

KILL LINES

The *choke and kill lines* are connected to a circulating port or to an outlet on the stack arrangement. These lines provide a circulating and routing system for pumping into or taking returns from the well.

PRESSURE CONTROL EQUIPMENT

A detailed explanation of all of the many possible snubbing operations is beyond the scope of this text. The discussion below is general and based on established industry practices with regard to snubbing units and snubbing procedures. It is assumed that operators and contractors are in compliance with orders and rules of the governing regulatory agencies.

Snubbing_2014.indd 11 6/20/14 8:45 PM

The BOPs and associated equipment should be thoroughly inspected and fully pressure tested at the yard before shipping to the job site. The date, test pressure and procedures should be documented and accompany the preventers. The preventers must be tested when nippled up and prior to commencement of the job, unless applications dictate otherwise. Also, on an H_2S location, sour service certification should be verified for all components in the stack and circulating manifolds. Supervisors should be notified immediately if there is any doubt as to the validity of an individual test or a question about the integrity of the equipment. All pressure equipment used in the snubbing operation should have a working pressure at least equal to the working pressure of the tree, the rig BOP stack or the wellhead. In general, all equipment that will be subjected to pressure must be first tested to a low pressure (200 to 300 psi), then to the prescribed high pressure. When testing valves on the stack, the tests should proceed from the inner valves outward. Inexperienced personnel should be instructed as to the dangers of potential trapped pressure during testing operations.

Common considerations for most snubbing jobs are listed below.

- It is good practice to drift the BOP stack before the jack unit is installed to verify that the bore of the stack is large enough to accommodate all tools that are to be run during the operation.
- Sometimes it is difficult for small diameter pipe to be centered by the closing ram blocks of large preventers. Operational procedures may need to be altered to assist centering the pipe.
- When using small pipe, the potential for buckling may be critical. A small spacer spool may help support the pipe.
- The length of the spacer spools within the stack should be sufficient to lubricate the maximum length of any fish, pipe string component or BHA that will be run or retrieved under pressure.
- Annular stripper bowl units are limited to well pressure less than 3,000 psi with non-collared pipe. Pressures above 1,500 psi will rapidly decrease the stripper's element life.
- The stripper bowl should be equipped with a bleed valve. During ram-to-ram stripping, this valve is usually in the open position.
- Annular preventers may be used for pressures greater than 3,000 psi when the outside diameter of the work string varies, as in tool joints or drill collars. If an annular preventer is used, a small surge accumulator bottle should be installed immediately adjacent to the closing port on the preventer in order to compensate for tool joints as they pass through the preventer.
- Shear rams may require as much as 3,000 psi of operating pressure. Depending on the work string, a larger preventer may be required with a booster piston to shear specific pipe strings. Small-bore shear rams (4-1/16 inch) are generally not designed to seal after shearing the string.
- All manifold equipment should be rated in excess of the maximum estimated surface pressure. Hydraulic chokes are usually preferred for high pressure work and when abrasive fluids or plugging is anticipated. A minimum of two chokes with separate lines is required.
- Gate or plug valves, rigid steel piping, and flanged or otherwise approved connections should be used in surface equipment that will be exposed to well fluids.
- Xmas tree wing valves *should not* be used except for emergency well killing purposes.
- Kill fluid should be available if required for high pressure and/or critical work.

Snubbing_2014.indd 12 6/20/14 8:45 PM

BOP CONTROL SYSTEMS (ACCUMULATORS)

Requirements for the BOP control systems can vary between operators.

The BOP control system as a minimum:

- Should have a hydraulic pump (or circuit) dedicated to the BOP equipment.
- Should have an accumulator fluid volume 1-1/2 times the usable fluid required to close all BOPs and valve actuators and still have a minimum of 200 psi above the pre-charge pressure.
- The primary system and working safety BOP controls should be located in the workbasket. High pressure and critical work requires control of the HCR valve, master safety, blind and shear rams by the ground crew.
- The blind and shear ram controls require mechanical guards to prevent accidental operation. Additionally, all control levers should be labeled.
- The stack preventers should be number-sequenced, and the type of ram block in each preventer should be identified.
- The shear rams should have 3,000 psi closing pressure available.

Snubbing_2014.indd 13 6/20/14 8:45 PM

SECTION 2: PRE-JOB PREPARATION

JOB PLANNING

Since the majority of all snubbing operations are conducted on live wells that is, against wellbore pressure; it is crucial that a job plan be developed in great detail. Planning starts when the operator contacts the snubbing contractor and briefly outlines the general requirements. At that time the contractor begins to gather the specific data that engineers and supervisors will use to develop a final job plan. Some snubbing contractors have one or more standard forms that are used to organize pertinent pre-job information in a systematic manner. The list below contains some of the most important information that is used when developing a final operational program.

- A general history of the well, including the location, the reservoir characteristics and production history.
- Anticipated formation pressure.
- The reasons and primary objectives of the snubbing operation.
- Site elevation (zero depth).
- Type and size of all wellhead connections.
- Details of surface controlled sub surface valves (SCSSV) in place (ESD).
- Type of well completion.
- Detailed data of all tubulars and connections, including casing/liners in the well (de-rated strength values).
- Complete well profile including MD, TVD and pertinent directional data.
- Details of the production tubing string, including location and dimensions of string components.
- Depths of perforations.
- Details of completion fluid including type, density and flow properties.
- Surface pressures; flowing and static.
- Heights from wellhead to each component of the tree; BOP stacks, window, jack and basket.
- Special hazards, such as toxic and/or corrosive gases (H_2S, CO_2).

Snubbing_2014.indd 14 6/20/14 8:45 PM

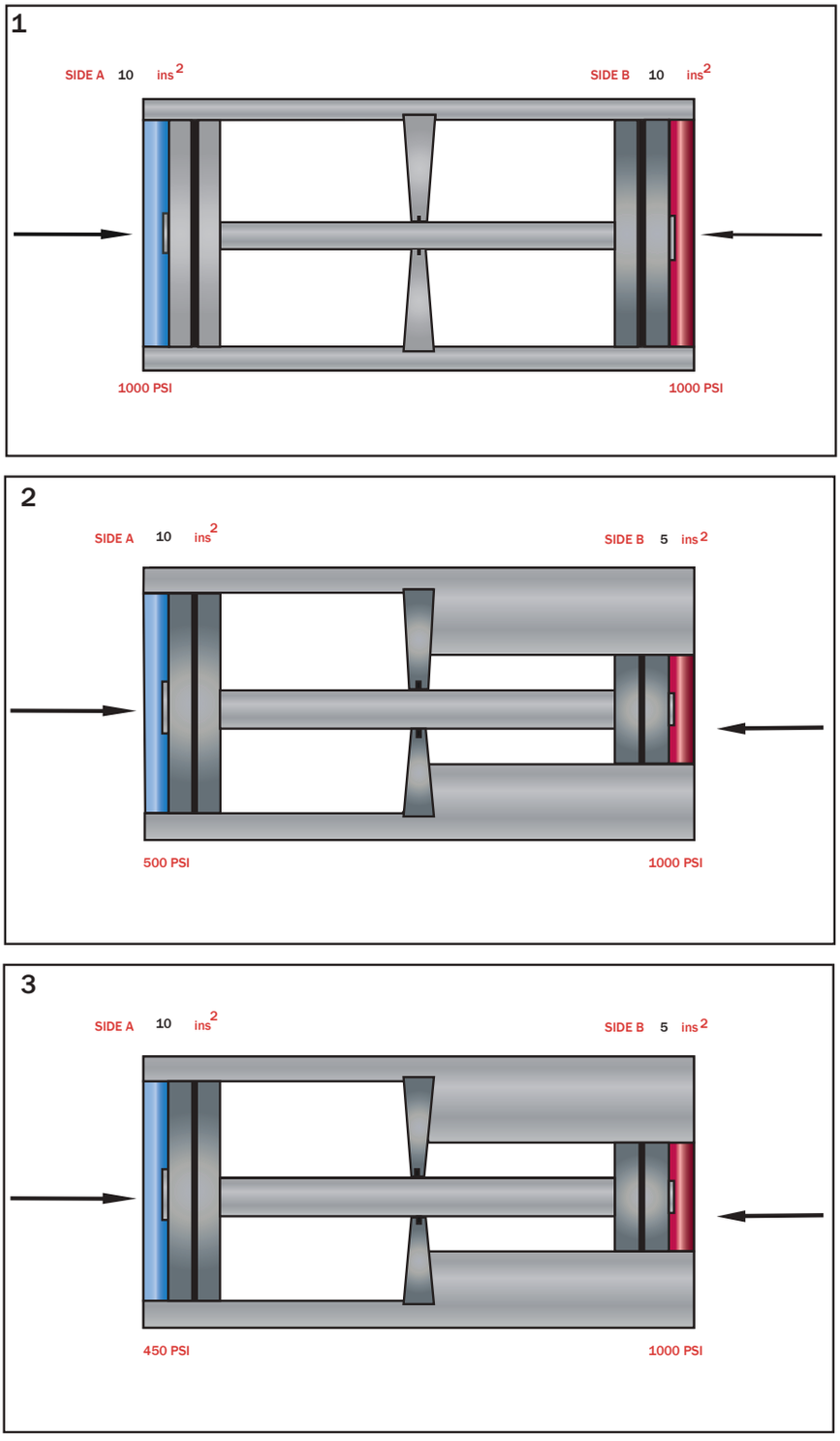

Figure B-14: area/Force ScheMatic

Snubbing_2014.indd 15 6/20/14 8:45 PM

SECTION 3: BASIC SNUBBING CALCULATIONS

Snubbing units must be able to develop enough downward force (the combination of effective pipe weight and hydraulic jacking pressure plus friction) to move a string of pipe into a live well in order to accomplish assigned tasks safely and efficiently. The following discussion presents some of the basic calculations that are used when planning a snubbing operation.

Force is defined as "that which causes changes, or stops the motion of a body[4]." Total force is the product of a specific pressure multiplied by the area against which the pressure is exerted, expressed by:

$$F = P \times A$$

Where:

F = force, lbs (lbsf)

P = pressure, psi

A = area, square inches (in^2)

The area of a circle can be determined by multiplying the square of the circle's diameter by the constant, 0.7854 ($\pi \div 4$). The closed outside diameter (OD) of the tubular to be snubbed represents a circle; therefore:

$$F = OD^2 \times 0.7854 \times P$$

Example 1

Calculate the total force exerted on the bottom of closed blind rams if the bore of the BOP stack is 10 inches and the pressure trapped below the rams is 40 psi. In this case the bore of the stack represents the area on the underside of the rams upon which the pressure of 40 psi is exerted.

$$F = 100 \times 0.7854 \times 40$$

$$F = 3{,}142 \text{ lbf}$$

Imagine what would happen if the rams were opened suddenly before the crew had checked for trapped pressure.

Consider numbers 1 through 3 in Figure B-14. In number 1, the applied pressure on each piston is equal. Since the areas are also equal the opposing forces are equal; therefore, there would be no net movement.

In number 2, the pressure on Side A is one half of that on Side B, and the area on Side A is twice that of Side B. The opposing forces exerted on each side are still equal, and, once again, there would be no movement.

4 *A Dictionary for the Petroleum Industry (2nd ed.)*

Snubbing_2014.indd 16 6/20/14 8:45 PM

Note that in number 3 the effective areas have not changed, but the pressure applied to Side A is now less than the pressure applied to side B. The total force exerted from the left, Side A, is 10 in^2 x 450 psi = 4,500 lbsf, which opposes the force on side B, 5in^2 x 1000 psi = 5,000 lbsf. It can be seen that the *differential force* of 500 lbsf would result in movement from right to left, or from Side B toward Side A.

Suppose a cylindrical tank with a 4-foot inside diameter contained 4 feet of brine water weighing 13.6 ppg. The hydrostatic pressure exerted on the bottom of the tank would be 13.6 x 0.052 x 4 = 2.8 psi. The force exerted on the bottom of the tank would be: 4 ft x 12 = 48 inches diameter. Therefore; 48^2 x .7854 x 2.8 = 5,067 lbsf exerted downward. If a total force and total area are known, the pressure to balance the force can be obtained by transposing the force formula:

$P = F \div A$

$P = 5{,}067 \div (48^2 \times 0.7854) = 2.8$ psi

Example 2

Data:

Casing: 7 in OD, 6.366 in ID
Production packer: at 7,640 ft
Tubing: 3-1/2 in. OD, 2.992 ID, 9.3 lbs/ft (ppf) made up on the packer
Fluid density: 10.3 ppg
Formation pressure 6,500 psi

What is the *differential pressure* exerted on the packer and in what direction?

(1.) Solve for the hydrostatic pressure (HP) exerted downward on the packer.

Where:

HP = hydrostatic pressure, psi

FD = fluid density, ppg

TVD = true vertical depth, ft

FP = formation pressure, psi

0.052 = conversion factor, ppg to psi/ft

F = force, lbsf

$HP = FD \times 0.052 \times TVD$

$HP = 10.3 \times 0.052 \times 7{,}640 = 4{,}092$ psi

Snubbing_2014.indd 17 6/20/14 8:45 PM

(2.) Solve for the area upon which the force is exerted.

The packer is attached to the tubing, therefore the area is found by multiplying the *difference* between the squares of the *inside diameter* (ID) of the casing and the *outside diameter* (OD) of the tubing by the constant, 0.7854.
$A = (6.366^2 - 3.5^2) \times 0.7854 = 22.2 \text{ in}^2$

(3.) Solve for the total force exerted downward on the packer:

$$\text{Force} = P \times A$$

$$F = 4{,}092 \times 22.2 = 90{,}842 \text{ lbsf}$$

The problem asks for the *differential pressure,* which is the difference between the total pressure exerted downward and the total pressure exerted upward. Since the well is shut in, the closed-in tubing is like a plug in the packer, therefore the pressure from below is exerted on the entire area of the packer. Formation pressure is given as 6,500 psi.

(4.) Solve for upward force exerted on the bottom of the packer/tubing.

$$F = P \times A$$

$$F = 6{,}500 \times 6.366^2 \times 0.7854 = 206{,}889 \text{ lbsf}$$

The differential force is 206,889 – 90,842 = 116,047 lbsf exerted upward

SNUBBING FORCE CALCULATIONS

From this point the pipe weight and snubbing force required can be determined. To calculate the pipe weight required to snub in a well against well pressure, use the pressure/area calculations.

Example 3

If the wellbore pressure is 6,500 psi, how much pipe weight would be necessary to remain static in the well? Assume 3-1/2 in, 9.3 ppf tubing.

Since,

$$F = P \times A$$

$$F = 6{,}500 \times 3.5^2 \times 0.7854 = 62{,}537 \text{ lbsf}$$

At 9.3 ppf, this is 6,724 feet of pipe (62,537 ÷ 9.3); therefore, this string does not have the necessary weight to strip and must be snubbed into the well.

Snubbing_2014.indd 18 6/20/14 8:45 PM

Although wellbore pressure is probably the most critical factor that must be taken into account when calculating snubbing forces, other factors must also be considered. The friction developed by moving the pipe through the preventers and against the walls of the well can be critical, especially in highly deviated wells. Most of the BOPs are wellbore energized to some extent. Once closed, the wellbore pressure assists in forming the seal. As a rule of thumb, friction is sometimes estimated to be 20% of the calculated force plus a safety factor. However, on critical jobs the friction is determined more accurately by engineering calculations. Also, the buoyant effect due to the density of the liquid in the well affects the pipe weight and must be factored into the force calculations. It is the *buoyed pipe weight* that is offset, to some degree, by the pressure against which the pipe is being run.

If a well is dead, the weight of pipe in fluid is more than adequate to sink into the fluid due to gravity. However, in a live well, the buoyancy of the pipe is offset by well pressure. When the buoyed weight of the pipe equals the total upward force from the well, the pipe is said to be at the *balance point* and no longer requires a push to force it into the well.

To calculate buoyed string weight if the pipe is dry (empty), omitting air density and ignoring friction:

$$W_e = L \times [(P_{wt} - \{(OD^2) \times 0.0408 \times MW\}]$$

Where:

W_e = Effective (buoyed) pipe weight (lbs)

L = Length of pipe in fluid in the well (ft)

P_{wt} = Weight of the pipe in air, pounds per foot (ppf)

0.0408 = Conversion factor used to convert cylindrical diameter to gallons per foot

FD = Fluid Density, pounds per gallon (ppg)

Example 4

What is the effective string weight with 6,724 ft of 3-1/2 in, 9.3 ppf tubing in a fluid having a density of 10.3 ppg?

Note that the formula contains three sets of brackets. The mathematical rule is to solve for the innermost brackets first, continuing until all brackets are removed. Since all the operators in this expression are multipliers, it can be solved easily. The steps below are presented to clarify the calculation.

$$W_e = L \times [P_{wt} - \{(OD^2 \times 0.0408 \times FD\}]$$

$$W_e = 6{,}724 \times [9.3 - \{(3.5)^2) \times 0.0408 \times 10.3\}]$$

$$W_e = 6{,}724 \times [9.3 - \{12.25 \times 0.0408 \times 10.3\}]$$

$$W_e = 6{,}724 \times [9.3 - 5.15]$$

$$W_e = 6{,}724 \times 4.15$$

$$W_e = 27{,}905 \text{ lbs buoyed}$$

Snubbing_2014.indd 19 6/20/14 8:45 PM

If the pipe is filled with fluid, the effective pipe weight increases in relation to the density of the fluid.

$W_i = L \times ID^2 \times 0.0408 \times MW$

Where:

W_i = Effective string weight (lbs.), as a result of filling the pipe.

L = Length of pipe with fluid in it (ft.)

ID = Inside diameter of pipe (inches)

0.0408 = Conversion factor used to convert cylindrical diameter to gallons per foot

FD = Fluid density (ppg)

Example 5

What is the increase in effective string weight (lbs.) of 6,724 ft of 3-1/2 in OD, 2.992in ID, 9.3 ppf tubing when filled (full) of a fluid with a density of 10.3 ppg?

Use the formula:

$W_i = L \times ID^2 \times 0.0408 \times MW$

$W_i = 6{,}724 \times 2.992^2 \times 0.0408 \times 10.3 = 25{,}296$ lbs.

When the string is filled with a fluid of a different density than that of the fluid in the well, the effective weight can be calculated by the following equation:

$W_f = L \times [P_{wt} - \{OD^2 \times 0.0408 \times FD_1\} + \{ID^2 \times 0.0408 \times FD_2\}]$

Where:

W_f = Buoyed weight of pipe in well (lbs.) with different fluid in it

L = Length of pipe in fluid in the well (ft.)

P_{wt} = Weight of the pipe per foot in air (ppf)

0.0408 = Capacity conversion factor to get cylindrical gallons per foot

FD_1 = Fluid density in well (ppg)

ID = Inside diameter of pipe (inches)

FD_2 = Fluid density inside pipe (ppg)

Snubbing_2014.indd 20 6/20/14 8:45 PM

Example 6

What is the effective weight (lbs.) for 6724 ft of 3-1/2 in OD, 2.992 in ID, 9.3 ppf tubing in a 10.3 ppg fluid filled annulus, with the tubing string full of 11.2 ppg fluid?

$$W_f = L \times [P_{wt} - \{OD^2 \times 0.0408 \times FD_1\} + \{ID^2 \times 0.0408 \times FD_2\}]$$

$$W_f = 6{,}724 \times [9.3 - \{3.5^2 \times 0.0408 \times 10.3\} + \{2.992^2 \times 0.0408 \times 11.2\}]$$

$$W_f = 6{,}724 \times [9.3 - \{12.25 \times 0.0408 \times 10.3\} + \{8.95 \times 0.0408 \times 11.2\}]$$

$$W_f = 6{,}724 \times [9.3 - 5.15 + 4.09]$$

$$W_f = 6{,}724 \times 8.24$$

$$W_f = 55{,}406 \text{ lbs}$$

CALCULATING THE BALANCE POINT

The transition between pipe light and pipe heavy (or vice versa) occurs at the balance point. At that point well weight of the work string is great enough to equal the upward force exerted by the well. Calculating this point is dependent on pressure, area, pipe weight and the fluid in the well and in the pipe. In certain instances, thousands of feet of pipe can be moved with minimal effort since the pipe weight is at an equal state with the snub forces. It is common to run dry pipe into the well past the balance point. The pipe is then filled with fluid, and can then be stripped to the desired depth.

The balance point can be calculated by:

$$BP = (P \times OD^2 \times 0.7854) \div [(65.4 - FD) \div 65.4] \div P_{wt}$$

Where:

BP = Balance point, ft

P = Surface pressure, psi

OD = Outside diameter of the pipe, ins.

P_{wt} = Air weight of the pipe, ppf

FD = Fluid density, ppg

65.4 = Density of one gallon of steel, ppg

Snubbing_2014.indd 21 6/20/14 8:45 PM

Example 7

The fluid density in the well is 10.3 ppg. How many feet of dry 3-1/2 in, 9.3 ppf tubing would have to be snubbed into a well, with a shut in surface pressure of 650 psi, to reach the balance point?

$$BP = (P \times OD^2 \times 0.7854) \div [(65.4 - \text{Fluid density (ppg)}) \div 65.4] \div \text{Pipe}_{wt}$$

$$BP = [650 \times 3.5^2 \times 0.7854] \div [(65.4 - 10.3) \div 65.4] \div 9.3$$

$$BP = [650 \times (12.25) \times 0.7854] \div [55.1 \div 65.4] \div 9.3$$

$$BP = 6{,}254 \div 0.843 \div 9.3$$

$$BP = 798 \text{ ft.}$$

The above assumes that the pipe is dry. If the pipe is being filled with the same weight fluid that is in the well, or a fluid with a different weight, then buoyancy corrections must be made. These corrections have been demonstrated in the previous calculations.

HYDRAULIC PRESSURE CALCULATIONS

The hydraulic pressure required to snub pipe into a well is dependent on the number of jacks that are available that is, the total hydraulic area. Pressure is usually applied to the rod side of the cylinder when snubbing. The hydraulic area used for force/pressure calculations is the cylinder area *minus* the rod area; therefore, the rod is not in the cylinder when pulling pipe.

To calculate the jack area pressurized to snub and the jack area pressurized to pull pipe, the following equations are used.

Snubbing jack area (cylinder – rod):

$$A_j = (\text{Cylinder Bore}^2 - \text{Rod Diameter}^2) \times \text{No. of Cylinders} \times 0.7854$$

Where:

A_j = Total pressurized area of the jack(s), ins^2

Cylinder Bore = Inside diameter of the jack, ins

Rod Diameter = Outside diameter of the rod, ins

No. Cylinders = Number of hydraulic jack cylinders in use

0.7854 = Conversion factor, inches diameter to area, ins^2

Snubbing_2014.indd 22 6/20/14 8:45 PM

Pulling jack area (cylinder bore):

A_j = Cylinder Bore^2 × No. of Cylinders × 0.7854

Where:

A_j = Total pressurized area of the jack(s), ins^2

Once the hydraulic area of the jack is determined, the required hydraulic pressure necessary to lift or snub pipe can be calculated. In order to calculate the required hydraulic pressure, transpose the formula for force:

F = P x A therefore P = F ÷ A.

P_h = F ÷ A

Where:

P_h = Hydraulic pressure required necessary to lift (or snub), psi

F = Force required, lbs (snubbing force or lifting)

A = Jack area, ins^2

Example 8

Using the data given below, calculate the hydraulic pressure required to snub into the well.
Well pressure: 6,000 psi
No. of jacks: 4
Jack cylinder ID: 4 in
Jack rod OD: 2.625 in
Tubing OD: 3.5 in
F_f (friction through rams): 2,400 lbs

Note: The friction value was selected for purposes of this example only. Using a rule of thumb, 6,000 psi x 20% + an arbitrary safety factor of 1,200 psi = 2,400 lbs.

F = P × A

Where:

F = Force that must be overcome, lbs

P = Well pressure, psi

A = Cross sectional area of pipe to be snubbed, ins^2

Ph = Hydraulic pressure

Snubbing_2014.indd 23 6/20/14 8:45 PM

$A = OD^2 \times 0.7854$

$F = P \times A$

$F = P \times (OD^2 \times 0.7854)$

$F = 6{,}000 \times (3.5^2 \times 0.7854)$

$F = 57{,}727$ lbsf

It will require 57,727 lbs of snubbing force plus force to overcome the friction of the preventer to snub this pipe into the well. Since the friction that must be overcome on the preventers is 2,400 lbs., this is added to the force required. The calculation for total force required is:

$F_t = F + F_f$

Where:

F_t = Total force required, lbs

F = Force that must be overcome, lbs

F_f = Friction that must be overcome to move the pipe through the preventer, lbs

$F_t = 57{,}727 + 2{,}400$

$F_t = 60{,}127$ lbsf

This is the total force required to snub the 3.5 in pipe into the well.

Solve for the hydraulic area available in the snub (jack) mode.

$A_j = (\text{Cylinder Bore}^2 - \text{Rod Diameter}^2) \times \text{No. Cylinders in use} \times 0.7854$

$A_j = (4^2 - 2.625^2) \times 4 \times 0.7854$

$A_j = (16 - 6.89) \times 4 \times 0.7854$

$A_j = 28.62$ in^2

$P_h = F_t \div A$

$P_h = 60{,}127 \div 28.62$

$P_h = 2{,}100$ psi of hydraulic pressure necessary

Snubbing_2014.indd 24 6/20/14 8:45 PM

PIPE BUCKLING CALCULATIONS

After required snubbing force has been calculated, it must be compared with the compressive load for the pipe to help ensure that the pipe will not buckle. Buckling of the pipe occurs when compressive force exerted on the pipe exceeds the compressive strength of the pipe. Buckling occurs first in the maximum unsupported length of the string. This will be in the window area of the snubbing unit if a window guide is not used.

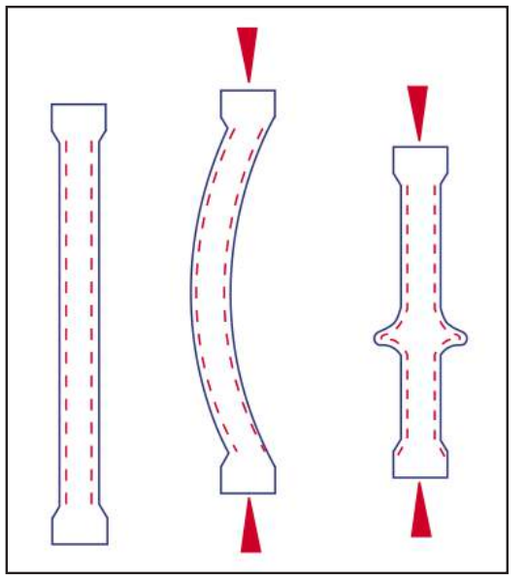

Figure B-15: leFt to right — no Buckling, Major axiS Buckling and local Buckling

Generally, there are two types of buckling that may occur during snubbing operations: elastic and inelastic buckling. Elastic or long column buckling does not exceed the yield of the pipe. The pipe is not permanently deformed. Inelastic buckling exceeds the yield and permanently deforms the pipe. There are two types of inelastic buckling, intermediate and local.

The type of buckling that can occur is determined by calculations to compare the column slenderness ratio (C_c) to the effective slenderness ratio (S_r) of the pipe considered. If the effective slenderness ratio (S_r) is greater than the column slenderness ratio (C_c), then major axis elastic buckling will occur. When the effective slenderness ratio (S_r) is less than the column slenderness ratio (C_c), then local inelastic buckling will occur. Once the type buckling has been determined, the compressive load that will produce buckling can be calculated. Buckling calculations are quite complex. Nowadays engineers use sophisticated computer software to predict the likelihood of pipe buckling and integrate the results into the overall operational program.

Snubbing_2014.indd 25 6/20/14 8:45 PM

SECTION 4: SAFETY PLANNING AND PROCEDURES

A detailed safety program, tailored to the job at hand, is developed and integrated into the overall snubbing operational plan. A pre-job safety meeting is then held to present the plan to all personnel who will be involved in the operation. The purpose of this first meeting is to explain and discuss all significant points included in the safety plan. Persons attending the meeting might include operator representatives, company safety engineers, snubbing field supervisors and snubbing crews, as well as specialty personnel; for example, a perforating crew. This first main meeting might include as many as 35 attendees.

The following list represents some of the primary items to be discussed.

- An explanation of the overall objectives of the job.
- Site description and preparation.
- Safe heavy equipment practices (transport, offloading, rigging).
- Required personal protective clothing and equipment (PPE).
- Restricted on-site areas and equipment.
- Details of the emergency shutdown systems (ESD).
- Site emergency evacuation plans, including evacuation of any injured workers.
- Emergency evacuation equipment and procedures for workbasket personnel.
- Site communication systems, including hand signals.
- Emergency shut-in procedures and contingency plans for securing the well.
- Pressure testing procedures.



Figure B-16: required perSonal protective equipMent

Well control is a prime concern of snubbing contractors. Two backpressure valves (BPVs) are run near the bottom of a snubbing work string to prevent well fluids from flowing up inside the string. These check valves are usually either ball-and-seat or flapper-type one-way valves. In addition, a landing nipple is often run one joint above the BPVs. The landing nipple has a profile that will receive a pump-down dart or plug to stop the flow in the event that a BPV fails. In most cases the ram BOPs are the only barrier between the wellbore and personnel. Depending upon well conditions that is, pressures and the current operation, the BOP stack configuration can vary greatly. On some jobs there may be a minimum of three BOPs; on others, as many as ten. BOP configuration is determined in the pre-job phase of the operation. Emergency procedures and drills are often custom-developed for the pending job and are covered in detail during the pre-job planning.

Snubbing_2014.indd 26 6/20/14 8:45 PM

When working on an offshore platform, it is likely that there are other wells producing as the snubbing operation continues. In the event that shut-down sequence occurs for some reason such as the flow line leaks or flammable liquid spills, the snubbing crew must respond rapidly to shut the operation down and secure the well.

It is impossible to devise a standard procedure or drill that can be universally applied to all snubbing operations because of the varied nature of each specific job. The ten-step procedure outlined below is offered as a *possible* example of an emergency well-securing procedure only and should not be taken as a recommended procedure.

1. Position the box end of the tubing at working level in the basket.
2. Immediately secure the pipe by setting the slips. Slips should secure the string in both the heavy and light mode.
3. Install a stabbing valve (FOSV) in the open position.
4. Close the FOSV.
5. Close the equalizer and bleed-off valves.
6. Close the stripper rams and top safety pipe ram.
7. Lock all closed rams.
8. Secure the counterbalance and hanging loads.
9. Shut down the engine.
10. Close relevant gate valves on BOP stack and choke manifold.
11. Report to supervisors for further instructions.

LOCATION/SITE PREPARATION

Factors that influence site preparation include size and weight of the unit; and structure type, pollution concerns, wildlife restrictions and noise abatement. Once the necessary permits are obtained, the following items are considered when preparing the location for snubbing operations:

- Prior to moving onto an existing well location, the sub-surface control valves should have been tested and the well shut in after recording the flowing and shut-in pressures.
- The potential load on the wellhead must be considered before rigging up the snubbing unit. Rig-up and rig-down procedures for the equipment, especially if not a standard hook up, should be discussed in detail.
- Once the primary equipment has been placed according to the operational program, a checklist can be used to ensure that all preparations are completed before the job begins.

A checklist might consist of the following items:

- Emergency evacuation paths are unobstructed and clearly marked.
- Areas and spaces that contain high pressure piping and hydraulic hose bundles are clearly marked.
- Location and controls for the emergency shutdown system (ESD) is clearly posted.

Snubbing_2014.indd 27 6/20/14 8:45 PM

- Ground-based (secondary) BOP controls are placed a safe distance from the wellhead and in full view of the workbasket personnel.
- Tertiary BOP controls are placed behind a firewall if possible.
- Choke manifold lines are as straight as possible with no right angle turns.
- Fluid pumps are placed in such a way as to allow an unobstructed view of the workbasket.
- Engines are positioned in such a way that exhausts are directed away from flow lines or areas containing well fluids.
- Engines and hydraulic power packs are positioned away from the well and also away from flowlines and pressure venting lines. Care must be taken to ensure that the lines will not interfere with well control operations.
- A list of all equipment that may be used and the function of that equipment should be provided. Equipment should be arranged in such a way that it is readily accessible.

GENERAL RIG-UP PROCEDURES

- Prior to rigging up, all equipment, including tubular goods, should be thoroughly inspected. On low pressure jobs that is, on wells where the anticipated surface pressure is 3,000 psi or less, connection threads on the work string should be gauged and the full length of the pipe drifted to API specifications. High pressure work will usually require a thoroughly detailed inspection done by pipe inspection service companies. Inspection certificates should accompany the string with delivery.
- Guy wires should be connected to derrick braces or structural anchor points; otherwise, they should be pull-tested according to API specifications.
- All escape paths and methods should be secured and operational before commencing the snubbing operation.
- All systems should be function-tested. Test all hydraulic lines to full-rated working pressure (not to exceed 3,000 psi).
- Pressure tests (low, high) are carried out on BOPs and manifold equipment as per a written test procedure. BOPs may be operated against pressure to ensure proper operation. (*Note: Internal stack pressure will increase during this test. BOP stack pressure should be carefully monitored to avoid exceeding the rated working pressure.*)
- Pressure test BPVs, nipple assemblies, safety valves, and other equipment. Stripper rubbers and annular BOPs should be tested to 1.25 times the anticipated pressure at minimum, not to exceed the rated working pressure. Subsequent BOP tests should be conducted at least once a week. Safety rams should be function-tested periodically to check for hydrate formation in the bonnet area (gas wells).
- Set the jack pressure and force (maximum of 70% of buckling load pipe light, 80% of tensile load pipe heavy).
- Set the counterbalance pressure (normally 1,500 psi).
- A pipe centering (tubing) guide should be securely installed in the window to provide lateral support to small OD pipe. A work platform and safety rails are required when handling equipment in the window.

Snubbing_2014.indd 28 6/20/14 8:45 PM

A GENERAL SNUBBING PROCEDURE

1. Install backpressure valves and nipples and/or a check valve.
2. Install a smooth bore landing (seating) nipple above the BPVs.
3. Install a full opening safety valve (FOSV) in the open position.
4. Paint a stripping mark on the pipe. The mark is measured from the pin of the joint. The distance of the mark will depend on the distance from the middle of stripping rams #1 and #2 up to the rotary table or the working area.
5. When the tubing is full of gas, several barrels of water are pumped into the pipe in order to provide some hydrostatic pressure, thereby lowering the snubbing forces required. Also, if there is flow-back from the pipe, the returning fluid is much safer to handle than gas. If the situation prevents pumping the fluid in, the pipe can be run into the gas-filled tubing or casing.
6. With the bottom-stripping ram (#2) closed, lower the tool joint to within 1 foot of that ram. It is a good idea to lubricate the outside of the pipe with liquid mud, oil or other appropriate lubricant. (*Caution: If the slips are inadvertently set on a tool joint in pipe light conditions, it is possible that the pipe can be actually blown up the well.*)

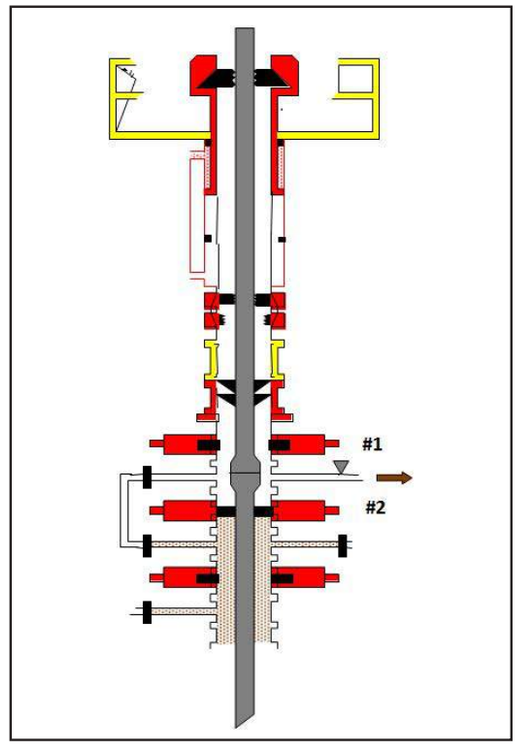

Figure B-18:SnuBBing into hole

7. Close the upper ram (#1) above tool joint.
8. Equalize the pressure between the upper (#1) and lower (#2) rams.
9. Open the ram (#2) below the tool joint.
10. Inject the pipe into the well, being careful not to take too large a bite in order to avoid bending the pipe. Stop with the next tool joint just above the upper set of rams. Care should be taken not to tag up on the rams with the tool joint.
11. Change back to the #2 ram, ready for the next tool joint.
12. The casing pressure is held constant while lowering a new joint of pipe and bleeding off gas/liquid above the #2 ram.

Note: The effective weight of the pipe can fluctuate when a tool joint passes through a stripper or annular preventer. In fact, it is possible that the increased area of the tool joint could cause a transition from pipe light to pipe heavy. Some operations call for snubbing the string in dry until the balance point is reached. At that time the slips can be set and the pipe filled with fluid. After filling the pipe, the trip is continued using stripping procedures.

Some service companies will snub pipe empty until it begins to float. At that time the snubbing slips are set and the pipe filled. Snubbing slips can then be inverted and the trip continued using stripping procedures.

Snubbing_2014.indd 29 6/20/14 8:45 PM

SECTION 5: COMPLICATIONS

Today's snubbing systems are well equipped to regain or retain control in the event of equipment failure due to their ability to inject tubulars into a pressurized well. While every effort is made to minimize sources of failure, some failures, such as stripper rubber failure, stripper ram packer failure and slip die failure, can be considered a certainty. If a failure occurs, qualified and immediate action is required to minimize or eliminate secondary effects or hazardous conditions. When a failure occurs, one or more BOPs must be closed. BOPs should be functioned individually. If the unit has a dedicated closing unit rather than just a dedicated circuit, the BOPs may be closed in rapid sequence. In all situations, loss or partial disabling of the secondary or tertiary well control systems must be reported to the operator's representative immediately. Failures can have consequences on simultaneous operations, unknown to the snubbing crew.

Problems during snubbing operations cannot be standardized due to the inherent dangers of working against wellbore pressure. However some failures, like rubber product wear, can be anticipated on nearly every job. All problems or failures must be analyzed on a case-by-case basis, based on the specific situation. A few of the more common complications with possible solutions are listed below.

POWER PACK FAILURE

Two hydraulic power packs should be available, especially on high pressure or critical wells. As with any operation, contingency plans are required, and certain personnel should be assigned particular responsibilities.

Possible Solution

Workbasket personnel should perform the following actions:

1. If possible, position the tool joint with the box end at the basket level.
2. Close both stationary and traveling slips in order to hold the work string.
3. Install a stabbing valve (FOSV) in the open position.
4. Close the uppermost safety ram.
5. Close both stripper rams.
6. Secure the load supported by the counterbalance winch with a mechanical wireline clamp.

Ground personnel should:

1. Lock the safety and stripper rams.
2. Transfer the system hoses to the backup power pack.
3. Start the backup power unit.
4. Confirm that all hydraulic circuits are operational.
5. Regulate the safety systems and pressures as needed.
6. Troubleshoot and repair the failed power pack if possible. After the hose changeover and engine re-start, supervisors should consider the consequences of continuing the operation with (or without) a backup power pack.

Snubbing_2014.indd 30 6/20/14 8:45 PM

SLIP FAILURE

Power slips are typically actuated 4 to 5 times per joint of tubing. Such repeated use can dull the slip's wickers. Also, the wickers can become caked with well fluid and small debris. Slips can be considered well control equipment during snubbing operations and therefore, they must be inspected and cleaned regularly in order to prevent failure.

Possible Solution:

1. Immediately close the alternate or backup slips (snubbing units have a minimum of two bowls for pipe light operations).
2. Install a stabbing valve (FOSV) in the open position.
3. Close the stripper rams.
4. Repair, clean or replace the slip dies and service the slip bowl as required.
5. Test the load-support ability of the slip bowl by transferring the load with the jack while the stripper rams are closed.
6. Inspect the alternate bowl for slip die condition before resuming operations.

STRIPPER ELEMENT FAILURE

Generally speaking, failure of the stripper rubber is progressive, starting with a small leak. The regulated pressure to the stripper rubber ranges from 0 to 3,000 psi. As regulated and well pressure increase, the rubber will wear and failure can be expected. Pipe condition, footage run, rubber quality, well pressures and workover fluid composition all affect the service life of the element. If the stripper rubber leak is severe, it can alter the pressure/force/area enough to significantly affect the string weight. It must be understood that pressure venting through the stripper rubber may allow formation influx.

At this point, the operator's representative and snubbing supervisor determine remedial action. Keep in mind that an influx of formation fluids could have occurred during the pressure drop (if a drop occurred). Depending upon the weight mode of the work string, the following remedial actions can be recommended.

In the event of stripper rubber failure:

1. Position the tool joint at the workbasket level.
2. Close the stripper rams.
3. Close the safety rams.
4. Install a stabbing valve (FOSV) in the open position.
5. Bleed the pressure below the stripper to zero.
6. Change the stripper element.
7. Carefully re-establish the pressure below the stripper, checking for leaks.
8. Open the safety rams.
9. Continue with the operation.

Snubbing_2014.indd 31 6/20/14 8:45 PM

LEAKING STRIPPER RAMS

1. Close the safety rams.
2. Install the stabbing valve in the open position and close the valve.
3. Bleed off pressure above and below failed stripper rams.
4. Open stripper rams.
5. Change stripper ram elements as required.
6. Close stripper ram.
7. Equalize the area above the ram that is holding well pressure and below the repaired stripper ram.
8. Monitor for leaks.
9. Open safety rams and resume operations.

CHOKE SYSTEM FAILURE

Choke and/or choke manifold failures fall into three general categories:

- Erosion and washouts caused by circulating at high pressure for an extended period of time.
- A rupture or leak in the lines from the BOP stack.
- A blockage due to solids or hydrate formation in the lines.

1. Position the work string off-bottom.
2. Continue circulating through the secondary choke and/or line.
3. Repair chokes or line as necessary.
4. Resume normal operation using the primary choke and line.

BACK PRESSURE VALVE (BPV) FAILURE

Two BPV assemblies are normally used for snubbing operations to control pressure inside tubing. Usually two flapper-type check valves are run in tandem with a seating nipple above the check valves. If one or more of the check valves fail after extended pumping time, a dart may be dropped or pumped to land in the no-go nipple. In some cases, wireline nipple subs are included in the BHA.

A blanking or pump-through plug can now be set if a BPV fails. Pressure inside the tubing string can be an indication of a leaking BPV, especially when string weight is correct and parted tubing is unlikely. In the event of pressure and backflow through BPVs, the following procedures can be used:

1. Position the string box connection to the workbasket level, install a stabbing valve (FOSV) in the open position and close the valve.

Snubbing_2014.indd 32 6/20/14 8:45 PM

2. Verify string weight.
3. Connect the circulating hose.
4. Try to clear trash from the BPV seat by opening the stabbing valve and alternately pumping through and bleeding back pressure several times.
5. Bring the last tool joint run into the window area of the jack and check for leaks. If there are no leaks at the tool joint, position the string back at workbasket level. Rig up to set a plug using a pump-down dart or wireline.
6. Pump down or run a tubing plug on wireline.
7. Once the plug is set, bleed off tubing.
8. If pressure indicates that the plug is not sealing, repeat previous step with a second plug.
9. If the second plug does not set and seal, consider killing the well with weighted fluid.
10. Install an inside BOP (IBOP), open the FOSV, run the string to the bottom and pump kill weight fluid throughout the well.

SUMMARY

From its original concept as a means of forcing pipe into a well against wellbore pressure to the HWO units of today, the snubbing unit has become a viable alternative for a full range of workover operations. Modern Hydraulic Workover Units are capable of doing practically any downhole work that has been traditionally done by drilling and workover rigs, with the added advantage of doing the job without killing the well. In recent high angle (lateral) wells drilled in shale formations, snubbing units are used to push various survey and completion tools into wells when the well inclination makes it impossible for wireline or coiled tubing to reach high angle extended measured depths. The complex engineering calculations used to determine pipe buckling limits and force computations are now solved accurately by computer software designed expressly for snubbing operations. The result is that snubbing operations today are safer, more efficient and more variable than ever before.

Snubbing_2014.indd 33 6/20/14 8:45 PM

SECTION 6: PRACTICE CALCULATIONS

1. A 5-inch OD (4.494 ID) casing has been perforated at 5,100 ft TVD. A bridge plug has been set at 4,930 ft. The pressure gradient of the formation is 0.5824 psi/ft.
   A. If the fluid in the casing is 10.0 ppg brine, what is the total force exerted on the top of the bridge plug?
   B. In the question above, what differential pressure exists between the top and bottom of the plug?
   C. What is the force exerted on the bottom of the plug?
2. How much pressure is required to exert 125 lbs of force on a closed 2-inch valve in a water line?
3. Ignoring buoyancy, how many feet of 2.375 inch OD (1.995 ID) tubing, weighing 4.7 ppf, must be run into a well to reach balance point with a formation pressure of 4,650 psi?
4. Determine the effective (buoyed) weight of 7,590 ft of 1.9 inch OD (1.61 ID), 2.9 ppf tubing run dry into a well containing 8.9 ppg brine water.
   A. What will the string weigh after it is filled with the 8.9 ppg brine?
5. State the formula for determining the jack area that is pressurized when snubbing pipe.
6. State the formula for determining the jack area that is pressurized when lifting (pulling) pipe.
7. Given the data below, determine:
   A. Total force that must be overcome to snub into the well.
   B. Hydraulic pressure necessary to snub into the well.

Well pressure: 4,780 psi
No. Jacks: 4
Jack cylinder ID: 4 in.
Jack rod OD: 2.125 in.
Tubing OD: 2.063 in
Friction: 1,000 lbs
Safety factor: 500 lbs

Snubbing_2014.indd 34 6/20/14 8:45 PM